TL Vario M

PART NO.

TL Vario M	5145000500-xxx

EXTRAS

- Battery backup unit
- Customized mounting brackets
- Shock proof execution
- Additional red or green light
- Through wiring
- Different cable glands
- Different supply voltages

MULTIPURPOSE WATERTIGHT LUMINAIRE FOR ENGINE ROOMS, WORK SHOPS, STORES, PASSAGE WAYS AND OUTDOOR AREAS

Design	According to rules of maritime classification societies and relevant standards
Housing/ cover	Opal polycarbonate, impact-proof, UV-resistant
Mounting	Different systems available, see next page
Cable entry	Max. 4 cable glands M20, max. 2 cable glands M25
Protection class	IP66/67
Weight	1.9 kg
Light source	Linear LP LED modules
Wattage	Max. 20 W
CCT (color)	4,000 K or 3,000 K
Luminous flux	2,200 lm
CRI	≥ 80
Voltage	220–240 V AC
Frequency	50–60 Hz

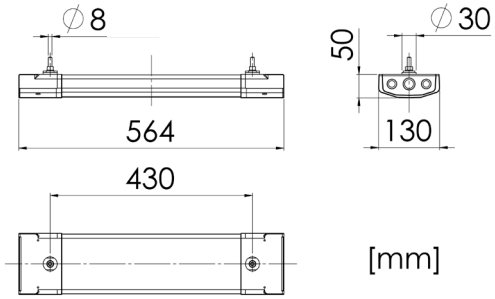

LIGHTPARTNER LICHTSYSTEME GMBH & CO. KG
AM MOHRENSHOF 7 · 28277 BREMEN · GERMANY
+49 (0)421-87 195-0 · SALES@LIGHTPARTNER.DE

Technical modification reserved without prior notice

Find our complete digital catalogue here:

TL Vario

Type: Bolt kit 8 mm

TL Vario M

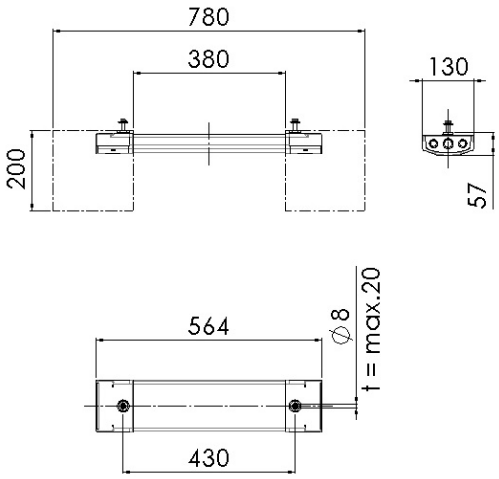

Type: LP160

TL Vario M

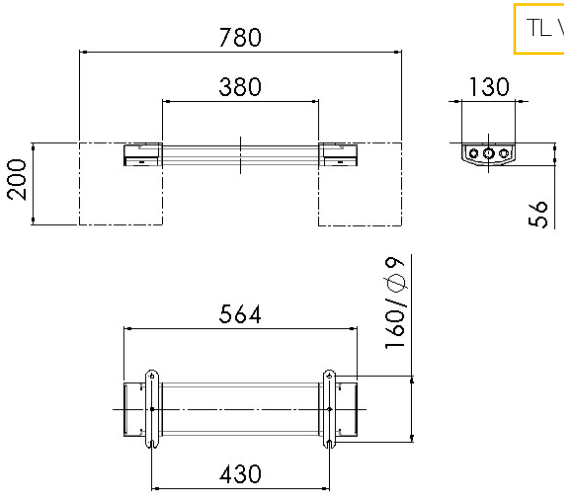

Type: LP GL

TL Vario M

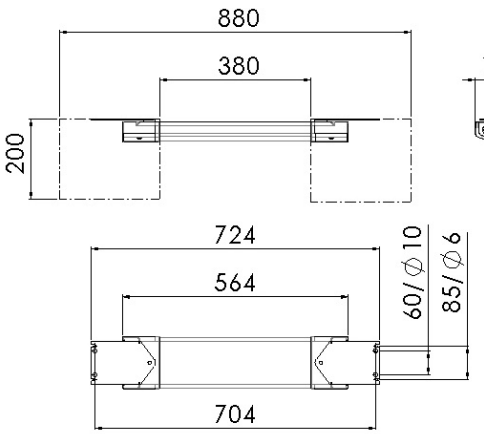

Type: Bolt kit 8 mm

Type: LP160

Type: LP200

Type: LP GL

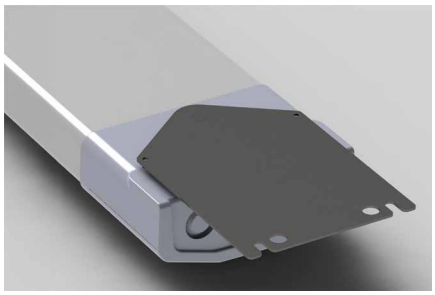

LIGHTPARTNER LICHTSYSTEME GMBH & CO. KG
AM MOHRENSHOF 7 · 28277 BREMEN · GERMANY
+49 (0)421-87 195-0 · SALES@LIGHTPARTNER.DE

Technical modification reserved without prior notice