DL90S

PART NO.

DL90S	5301020210-xxx

COLORS	PART NO.
White	5301020210-001
Chrome	5301020210-002
Steel brushed	5301020210-003
Gold	5301020210-004
Black	5301020210-005

EXTRAS

- Different connectors
- Different transformers
- GU10 execution

DOWNLIGHT FOR MR16 LED LAMPS.
APPLICABLE FOR CABINS, ACCOMMODATION AND PUBLIC AREAS

Design	According to rules of maritime classification societies and relevant standards
Housing	Aluminium
Decorative ring	See color information
Mounting	2 spring clips for ceilings max. 20 mm
Connection type	Ensto 2-pole plug
Protection class	IP20
Weight	0.1 kg
Light source	LED (lamp not included)
Lamp base	GU5.3
Wattage	Max. 35 W
Voltage	12 V
Electrical execution	Driver or transformer required (not included) 5806004510-001 (Wago 3-pole plug) or 5806004510-002 (Wieland 3-pole plug)

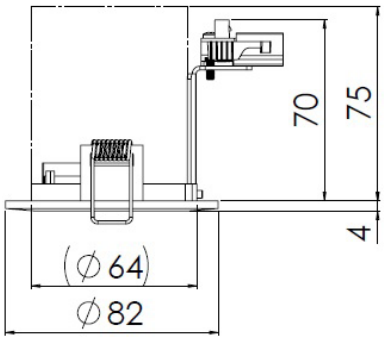

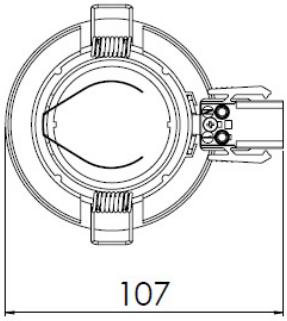

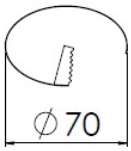

LIGHTPARTNER LICHTSYSTEME GMBH & CO. KG
AM MOHRENSHOF 7 · 28277 BREMEN · GERMANY
+49 (0)421-87 195-0 · SALES@LIGHTPARTNER.DE

Technical modification reserved without prior notice

Find our complete digital catalogue here: