TI20

PART NO.	
TI20	5135000300

TABLE LIGHT, ADJUSTABLE

Design	According to rules of maritime classification societies and relevant standards
Housing	Metal, silver (RAL9006) Friction-arm
Switch	In lighting head
Mounting	Base mounting
Connection type	Connection cable with Schuko plug
Protection class	IP20
Weight	1.5 kg
Light source	LED (lamp not included)
Lamp base	E27
Wattage	Max. 14 W
Voltage	110/240 V AC or 24 V DC
Frequency	50–60 Hz or 0 Hz

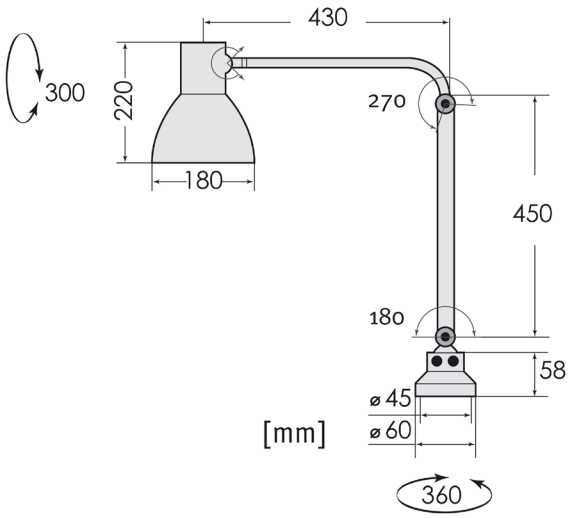

LIGHTPARTNER LICHTSYSTEME GMBH & CO. KG
AM MOHRENSHOF 7 · 28277 BREMEN · GERMANY
+49 (0)421-87 195-0 · SALES@LIGHTPARTNER.DE

Technical modification reserved without prior notice

Find our complete digital catalogue here: